LP7580

USER MANUAL

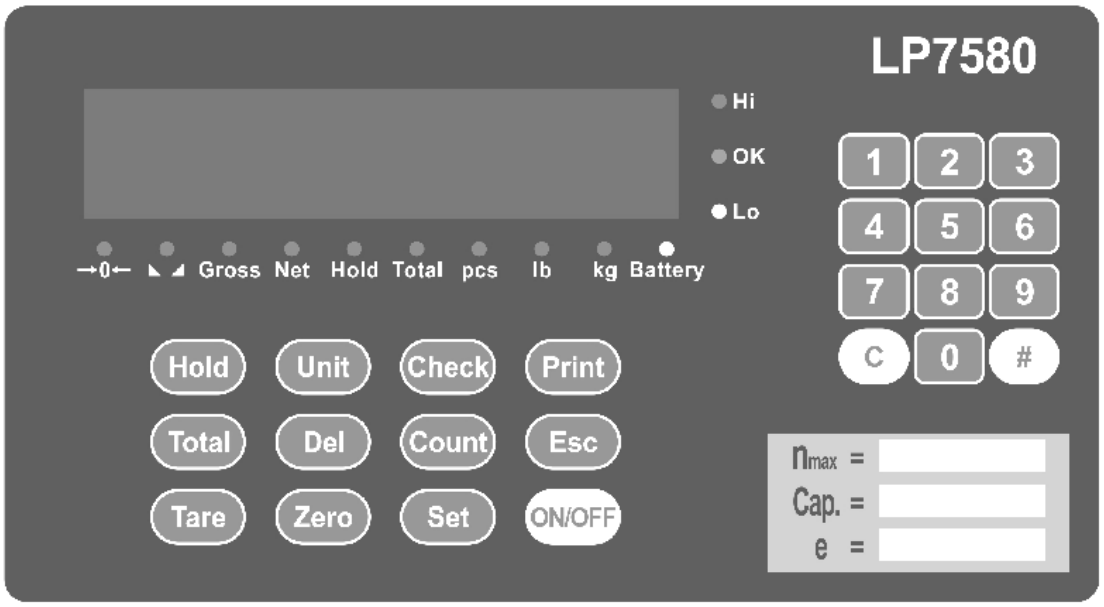

Safety Instruction

For safety operation pls. follow the safety instruction.

WARNING
Setting, calibration, inspection and maintain of the indicator is prohibited by Non-professional staff.

WARNING
Pls. make sure the weighing display have good ground in using.

	WARNING The indicator is the static and sensitive equipment, cut off the power during electrical connections, internal components touched by hand is prohibited, and please take the measure of anti-static.

LIST

1、INSTRUCTION 1
1.1 Main function 1
1.2 Technical parameter 1
1.3 Drawing 2
2、INSTALLATION AND CALIBRATION 3
2.1 Open to check 3
2.2 Power Connection 3
2.3 Scale connection 4
2.3.1 4 wire load cell connection 4
2.3.2 6 wire load cell connection 5
2.4 Communication interface 5
3、BASIC OPERATION 7
3.1 Keypad and display 7
3.2 POWER ON /OFF 9
3.3 Zero 9
3.4 Tare 9
3.5 Holding function 10
3.6 accumulation 10
3.7 Check 11
3.8 Counting 11
3.9 Unit switch 12
3.10 Printing 12
3.11 Numeric keyboard operation. 12
4、CALIBRATION AND PARAMETER SETTING. 14
4.1 Enter 14
4.2 Parameter keyboard operation 14
4.3 Parameter 14
4.3.1 Calibration 14
4.3.2 User setting 16
4.3.3 Communication setting 17
4.3.4 Application setting 17
5、OUTPUT FORMAT 20
5.1 Continuous transmit mode communication format 20
5.2 Commanding format 23
5.2.1 Standard command 23
5.2.2 Simple commanding： 24
5.3 Printing mode 24
5.3.1 Standard printing mode 24
5.3.2 Accumulation operation printing 24
5.3.3 Accumulation result printing 24
5.3.4 Counting printing 24
5.3.5 Checking printing 25
6、MAINTENANCE 26
6.1 Regular error and solution 26
6.2 Daily maintain 26
6.3 battery for use 27
6.4 Restore default parameter 27
6.5 Packing list 29

1、Instruction

LP7580 support AC power and DC power, suitable for bench scale, floor scale, truck scale. It is working with 32bit CPU and 24bit high precision ADC, made of stainless steel housing. Excellent performance make it proper for varied interface function. Waterproof connector and the cable connection fixed inside.

1.1 Main function

Basic:

- Zero,
- Tare, preset tare
- Unit switch
- Holding, peak, animal weighing function
- Accumulation, delete record
- Checking
- Counting
- Hi OK Lo function
- Overloading

Interface:

- Printing(RS232)
- Scoreboard(RS232)
- PC/DCS/PLC(USB/RS232/RS485)

1.2 Technical parameter

Accuracy class	n=5000 e
Resolution	display: 30, 000
Input voltage	-30~30mV DC
Excitation circuit	5 VDC, Maximum connect 12 load cell of 350Ω
AC power	AC110V
Battery	6V4Ah
Letter height	LED 20mm
Weight	3.2kg
Dimension	260x160x80mm
Protection Class	IP54
Operation temperature	- 10 °C ~ + 40 °C
Operation humidity	≤85%RH

1.3 Drawing

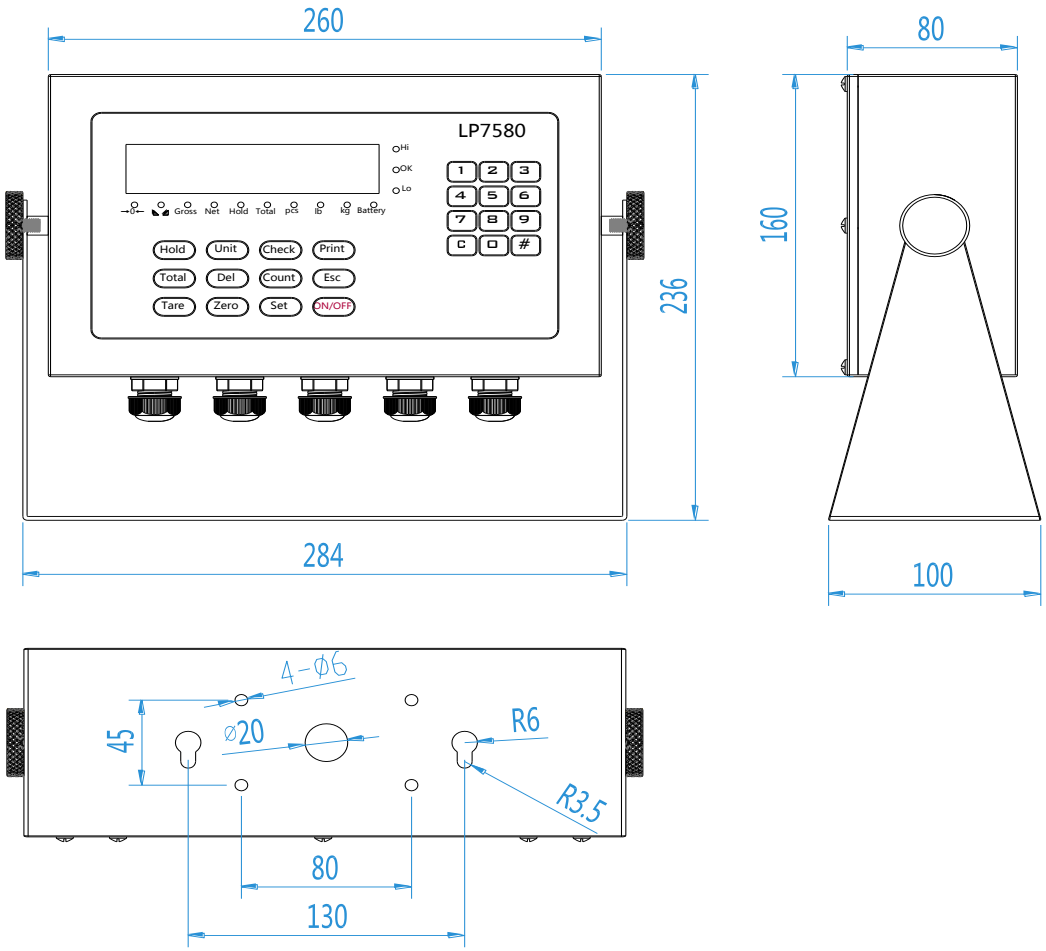

1.4 Name

LP7580E: LED display

2、Installation and calibration

2.1 Open to check

In order to well use the indicator, please check all the parts carefully according to the packing list attached in the specification while opening the indicator box. If there is a lack of parts or damage, please contact the company's after-sales service to get timely processing.

2.2 Power Connection

Indicator is working with AC power. Please note the voltage is proper and check AC power side is earthing.
Voltage transformer and stable circuit is built in the indicator, please don't open it without professional instruction.

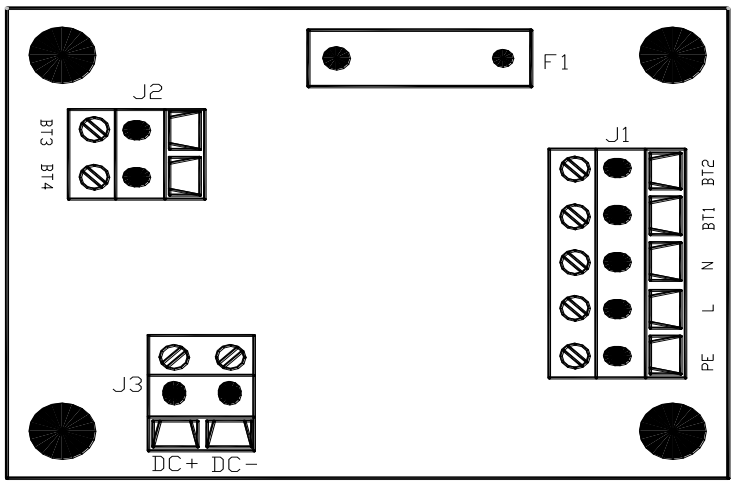

Stable Circuit connection
J1 Initial level for AC power input and voltage transformer
J2 Second level for voltage transformer
F1 220V 0.25A fuse

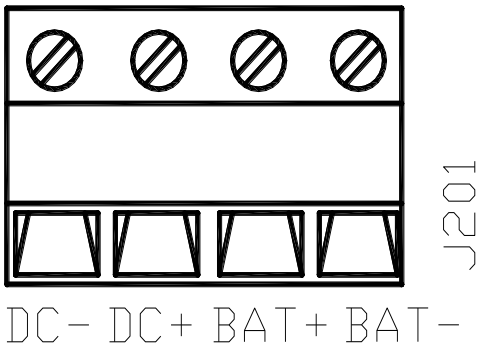

PCB indicator power connection

Positive battery connect with BAT+ , negative battery connect with BAT-.

2.3 Scale connection

LP7580 maxi. Supports 12 x 350ohm load cells. (4 wires or 6 wires load cell)
The connection between load cells and indicator is by terminal block.
The connection diagram as below.

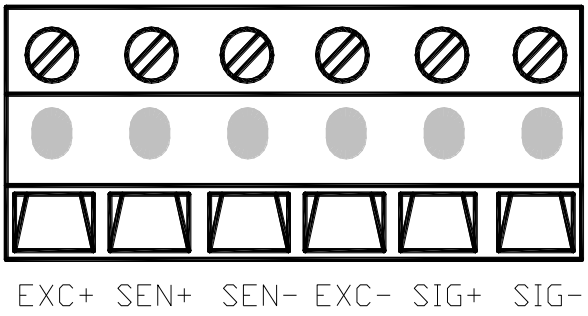

2.3.1 4 wire load cell connection

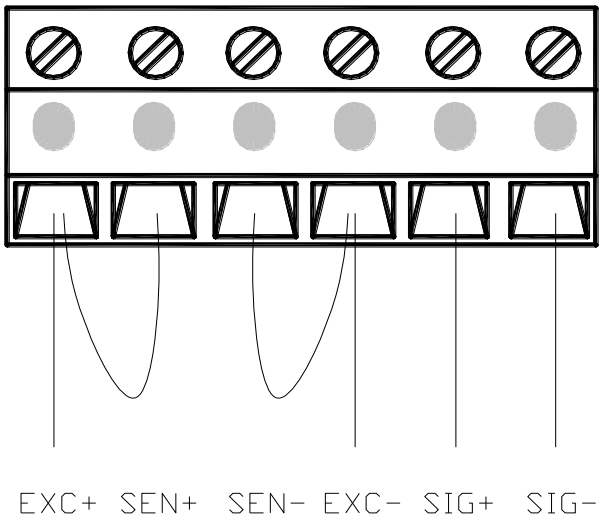

EXC+,EXC-,SIG+,SIG- （load cell）to EXC+,EXC-,SIG+,SIG-(indicator)
EXC+ and SEN+ to be short circuit
EXC- and SEN+ to be short circuit

2.3.2 6 wire load cell connection

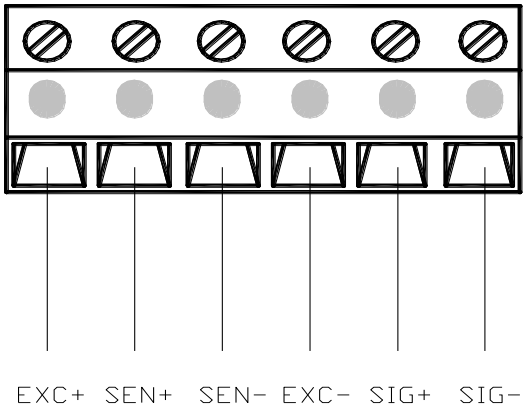

EXC+,SEN+, SEN-, EXC-,SIG+,SIG- （load cell）to EXC+,SEN+, SEN-, EXC-,SIG+,SIG- (indicator)

2.4 Communication interface

LP7580 owns 3pcs RS232 , 1 pc RS485 and 1 pc USB-Com.
1 RS232 is electrical isolation with load cell and can be set in C18 parameter, DEFAULT off.
RS485 and USB-COM are electrical isolation too.

The communication function is set in C41 ~ C79 parameter.

RS 232 connection as below.

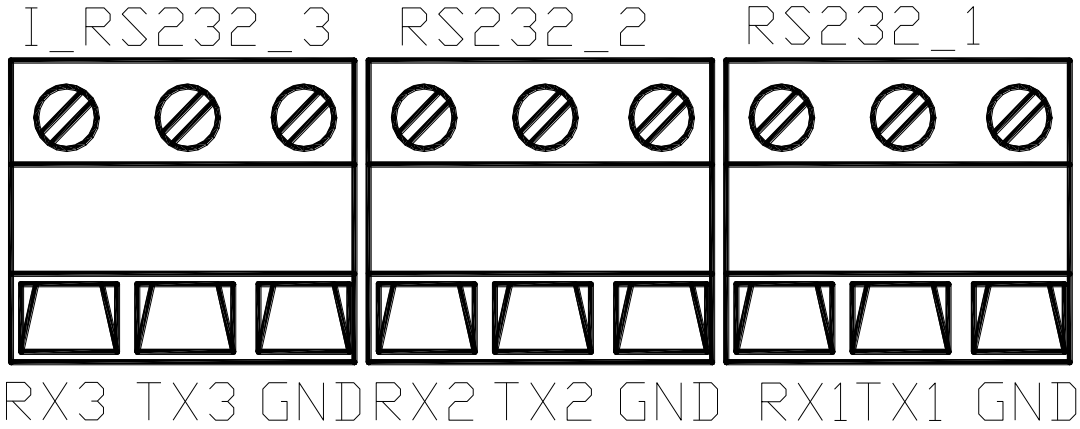

USB-COM as below.

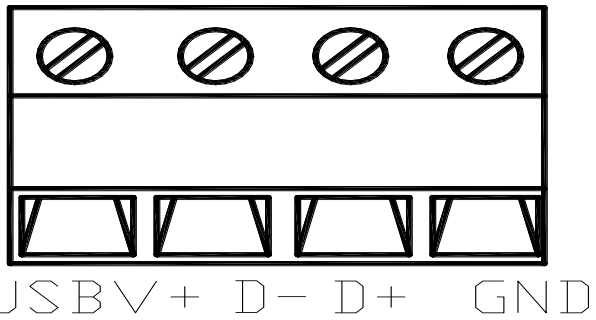

RS485 as below.

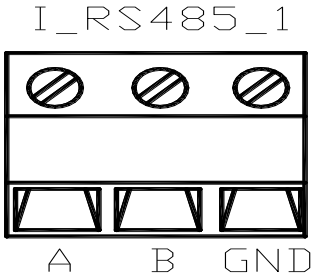

PIN definition:

PIN	Definition	Interface	Function
RX1	RS232-1 receive	RS232-1	Continues transmit
TX1	RS232-1 transmit		
GND	Earthing		
RX2	RS232-2 receive	RS232-2	Printing
TX2	RS232-2 transmit		
GND	Earthing		
RX3	RS232-3 receive	RS232-3 Electrical isolation	C18： Commanding mode Printing mode Continues transmit mode
TX3	RS232-3 transmit		
GND	Earthing		
A	RS485 output A	RS485 Electrical isolation	Commanding mode
B	RS485 output B		
USBV+	USB power	USB to COM Electrical isolation	Commanding mode
D-	Data-		
D+	Data+		
GND	USB earthing		

3、Basic operation

3.1 Keypad and display

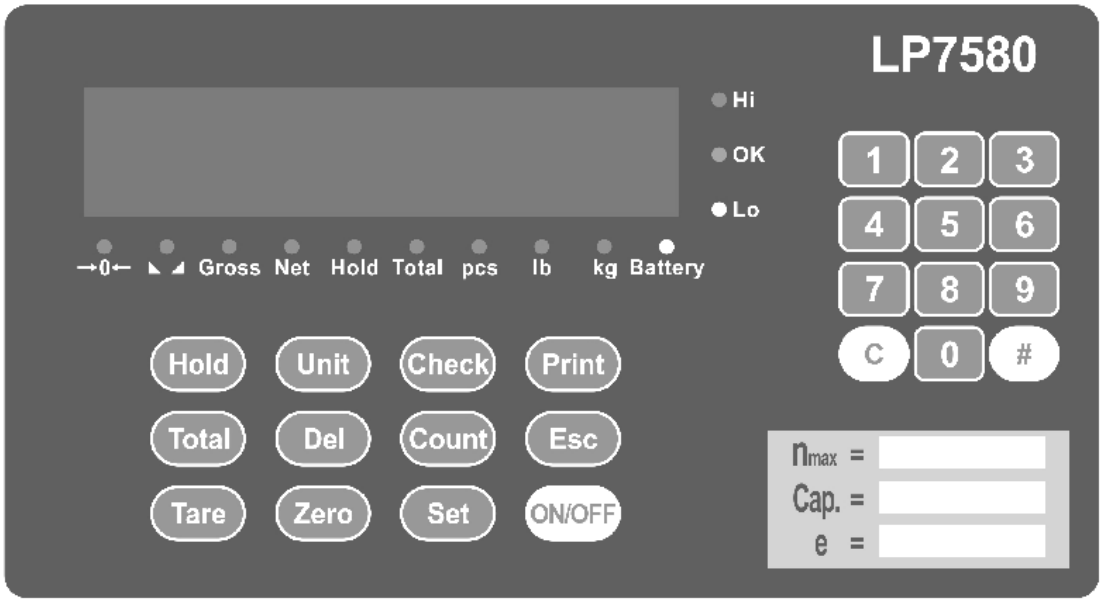

Display instruction

LED 显示	Instruction
8	Weighing data
kg	Kg unit
lb	Lb unit
Hold	Holding
Gross	Gross weight
Net	Net weight
◺◿	The weighing data is stable
⇨0⇦	Scale in zero
HI	Overload
OK	OK
Lo	Underload
Total	Total
Counting	Counting

Key function

Key	Key name	Key function
	Power on/off	Power on or power off
	Zero	Zero the weight within zero range
	Tare	At Gross mode, get the tare weight. At Net mode, clear the tare, get the Gross
	Holding the data	Holding Animal weighing
	Accumulation	Accumulation and save the weight data and time
	Delete	Delete the previous weighing data and the saved record
	Checking	Checking the record by number
	Esc	Back to weigh
	Counting	Change between weighing mode to counting mode
	Unit	Kg/lb
	Setting	Operation； With Zero to delay zeroing； With tare to input the tare weight； With total to check the accumulation； With Del to clear all saved record； With count to input the samples quantity； With ESC to calibrate
	Printing	Printing the weighing data

Numberic Key function

Key	Key name	Key function
0 ~ 9	Number key	0~9
C	Clear	Clear the input
#	Confirm	Confirm the input

3.2 POWER ON /OFF

ON/OFF to power on; weighing then ON/OFF to power off.

3.3 Zero

Within zero range, Zero to zero the current weight. If the weight is not stable meanwhile stable light not on, indicator can be zeroed. Over zero range, display ERR6.

3.4 Tare

Put Tare to make the current weight be the tare, indicator show 0 to be net weight meanwhile tare and net light on.

When net weight mode, put Tare to back tare and display gross weight.



Note: indicator not stable or display minus condition, tare function not workable.

Put Set and Tare together to preset the tare information by numeric keyboard.

3.5 Holding function

Parameter C11 to choose peak, number and animal weighing.

3.6 accumulation

Accumulation to save several weighing information, at most 999 times.

Operation:



to weigh, then stable 

, put Total to enter accumulation and display current accumulated time 

,then the accumulated weight and operating time to save automatically and display the current weight information.

Unloading to back zero 

. Then load next to be stable 

, put Total to accumulate 1 and display 

, and automatically save again. Then display the current weight information. The same operation way at most to be 999 times.

Check and quit:

Put Set then Total to check the accumulation result. Display the accumulated times first 

, then the result 

. Put Esc to quit.

Clear the accumulation:

Put Del display 

, put Set to clear the previous accumulation operation and quit; put Esc not to clear the previous one.

Put Set then Del to clear all accumulation.

3.7 Check

Check for the saved weight information.

Put Check display 

means 2 times of accumulation. By numeric keyboard to input the time number that be checked. Put # to confirm the input. Then display the exact time for save 



then display the weight 

. Put Esc to quit.

3.8 Counting

Counting function depending on the sample quantity to get the final quantity operation:

Weighing mode, put Count to enter counting mode. First, put the samples on the scale and display 

, by numeric keyboard to input the samples quantity 

, then put # to confirm the sample quantity and display 

. Then it can work for counting.

Sample quantity input:

To change the sample quantity. At counting mode, press Set then Count to input the new sample quantity input condition. Put the samples on the scale to display 

and by numeric keyboard to input the sample quantity 

, then # to confirm the new sample quantity and display



.

Quit counting mode:

Counting mode, press Count to quit this mode.

3.9 Unit switch

At weighing mode, press Unit for unit switch.



3.10 Printing

At the stable weighing mode, press Print to print the current weighing information.

At the accumulation mode, press Print to print the accumulated information.

At checking mode, Print to print the checked information.

3.11 Numeric keyboard operation.

Press 0 - 9 to input the numbers, # for confirmation, C for clear the input.

Operation:

1. display the current information.

2. press 0 - 9 to clear the previous information and input the new number blinking on the right side.



3. press 0 - 9, the current number move to left digit, then new input number blinking on the right side.



4. press 0 - 9 to repeat operation like step 3. 

5. press C to clear the wrong input. The left input number move to one right digit.



6. press # to confirm the input information.

7. if no need to confirm, no operation like step 6. Press Esc to quit.

Note: dashed frame means blinking.

4、Calibration and parameter setting.

4.1 Enter

At power on, two ways to setting menu.

1. At the calibration switch off, press Set then Esc to enter C11~C40 function setting.

2. Open the housing to make the calibration switch on, press Set then Esc to C01~C40 full function setting.

4.2 Parameter keyboard operation

Parameter menu and setting by numeric keyboard input to get (3.11). After setting over, press Esc to quit and back to weighing mode.

Example:

Parameter display , input the requested setting number, press 2 display . Then # enter into the setting, display , press 1 to change the parameter . After finish, press # to confirm and enter into next parameter .

4.3 Parameter

4.3.1 Calibration

C01 unit setting

Display [C01], press 

[C01 01] unit KG
[C01 02] unit LB

Press 

to enter next setting.

C02 decimal setting

Display [C02]，press 

[C02 00] No decimal
[C02 01] One decimal
[C02 02] Two decimal
[C02 03] Three decimal
[C02 04] Four decimal

Press 

to enter next setting.

C03 Division setting

Display [C03]，press 

[C03 01] Division=1
[C03 02] Division =2
[C03 05] Division =5
[C03 10] Division =10
[C03 20] Division =20
[C03 50] Division =50

Press 

to enter next setting.

C04 Max. weighing capacity

Display [C04]，press 

display [010000], by numberic keyboard to input the max. capacity. Press 

to enter next setting.

C05 Zero calibration

Display [C05]，press 

[C05 00], press 

display [C05 01], take out the weighing to

make scale empty, press 

, display [CAL 9]~[CAL 1], then to next setting.

C06 Full capacity calibration

Display [C06], press 

display [C06 00], press 

display [C06 01], press 

display [SPAn], then load the weight, display [010000] , by numberic keyboard to input the weight information, press 

to confirm, display [CAL 9]~[CAL 1] to next setting.

C07 recover all initinal setting.

4.3.2 User setting

C08 Holding mode

[C08 00]	Hold off
[C08 01]	Peak hold
[C08 02]	Data hold
[C08 03]	Auto hold
[C08 04]	Animal hold

Note:

Peak hold: display the max. weighing.

Hold: display the current weighing, mainly for animal weighing.

C09 Unit switch

[C09 00]	No permission to switch unit
[C09 01]	permission to switch unit

C10 Power saving setting

[C10 00]	Off this function
[C10 01]	3 mins without display change, display off。
[C10 02]	5 mins without display change, display off。

C11 Auto power off

[C11 00]	Off this function
[C11 01]	10 mins without display change, power off
[C11 02]	20 mins without display change, power off
[C11 03]	30 mins without display change, power off
[C11 04]	40 mins without display change, power off
[C11 05]	50 mins without display change, power off
[C11 06]	60 mins without display change, power off

C12 alarm setting

[C12 00]	close alarm
[C12 01]	open alarm

C13 Upper limit alarm You can set it within the max. capacity limit

C14 lower limit alarm You can set it within the max. capacity limit

C15 Inner Code displayenter C15 to check the inner code

C16 Preserved menu
C17 Preserved menu

4.3.3 Communication setting

C18 isolated RS232 serial port
[C18 00] off this port
[C18 01] commanding mode
[C18 02] printing mode
[C18 03] continues transmit mode

C19 Preserved menu

4.3.4 Application setting

C20 Manually zero range
[C20 00] close manually zero setting
[C20 01] ±1% max capacity
[C20 02] ±2% max capacity
[C20 04] ±4% max capacity
C21 Initial zero range
[C21 00] noinitial zero setting
[C21 01] ±1% max capacity
[C21 02] ±2% max capacity
[C21 05] ±5% max capacity
[C21 10] ±10% max capacity
[C21 20] ±20% max capacity
C22 Automatically zero tracking range
[C22 0.0] close zero tracking
[C22 0.5] ±0.5d
[C22 1.0] ±1.0d
[C22 2.0] ±2.0d
[C22 3.0] ±3.0d
[C22 4.0] ±4.0d
[C22 5.0] ±5.0d
Note：1、d = division；
2、the zero tracking range can not bigger than manual zero range.
C23 Automatically zero tracking time
[C23 00] close zero tracking time
[C23 01] 1 second
[C23 02] 2 second
[C23 03] 3 second
C24 Overload range
[C24 00] close overload range
01d～99d Note：d =division
C25 Negative display range
[C25 00] -9d

[C25 10] 10% max. capacity
[C25 20] 20% max. capacity
C26 Standstill time
[C26 00] quick
[C26 01] medium
[C26 02] slow
C27 Standstill range
[C27 01] 1d
[C27 02] 2d
[C27 05] 5d
[C27 10] 10d
Note：d =division
C28 Dynamic filter
Instruction：Dynamic filter is collecting the data filter before loaded weight stable. When loaded weight easily shaking (for example animal) , you can set this filter to make weight display more stable.
[C28 00] close dynamic filter
[C28 01] 1 digital filter strength
[C28 02] 2 digital filter strength
[C28 03] 3 digital filter strength
[C28 04] 4 digital filter strength
[C28 05] 5 digital filter strength
[C28 06] 6 digital filter strength
Note：Pls setting dynamic filter strength carefully, the No. is bigger, more stable. if the loaded weight shake not too much. The setting is less than 3
C29 Noise filter
[C29 00] close noise filter
[C29 01] 1 digital filter strength
[C29 02] 2 digital filter strength
[C29 03] 3 digital filter strength
C30 Preserved menu

Serial port communication continuous transmit
C41 communication format
[C41 00] close continuous transmit
[C41 01] format 1
[C41 02] format 2
[C41 03] format 3
[C41 04] format 4

C42 Baud rate
[C42 00] Baud rate 600
[C42 01] Baud rate 1200
[C42 02] Baud rate 2400
[C42 03] Baud rate 4800

[C42 04] Baud rate 9600
[C42 05] Baud rate 19200
[C42 06] Baud rate 38400
[C42 07] Baud rate 57600
[C42 08] Baud rate 115200

C43 odd-even check
[C43 00] 8n
[C43 01] 70
[C43 02] 7e

C44 interval
[C44 00] no limit
[C44 01] 100ms
[C44 02] 200ms
[C44 03] 500ms
[C44 04] 1s
[C44 05] stable transmit

C45 checksum
[C45 00] NO
[C45 01] YES

C46 simple command support
[C46 00] NO
[C46 01] YES

Serial port communication commanding mode
C51 commanding format
[C51 00] Close commanding mode
[C51 01] simple commanding
[C51 02] standard commanding

C52 Baud rate
[C52 00] Baud rate 600
[C52 01] Baud rate 1200
[C52 02] Baud rate 2400
[C52 03] Baud rate 4800
[C52 04] Baud rate 9600
[C52 05] Baud rate 19200
[C52 06] Baud rate 38400
[C52 07] Baud rate 57600
[C52 08] Baud rate 115200

C53 odd-even check
[C53 00] 8n
[C53 01] 70
[C53 02] 7e

C54 Response format
[C54 00] format 1
[C54 01] format 5
[C54 02] format4

C55 slave ID 0~99

Serial port communication printing mode
C61 printing choose
[C61 00] close printing mode
[C61 01] open printing mode

C62 Baud rate
[C62 00] Baud rate 600
[C62 01] Baud rate 1200
[C62 02] Baud rate 2400
[C62 03] Baud rate 4800
[C62 04] Baud rate 9600
[C62 05] Baud rate 19200
[C62 06] Baud rate 38400
[C62 07] Baud rate 57600
[C62 08] Baud rate 115200
4.3.5 quit the setting

After setting finish, press 

to back weighing mode.

5、Output format

5.1 Continuous transmit mode communication format

Format 1:

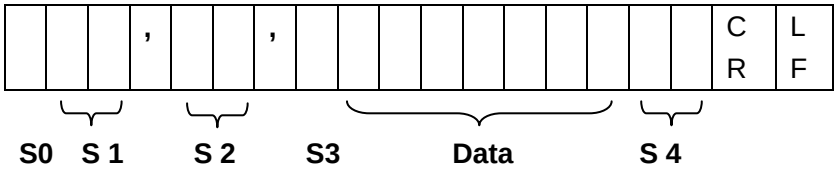

S0: address, without setting, not send. You could set between 1~99, advice 65~90 that is A~Z.

S1: weight status, ST= standstill, US= not standstill, OL= overload
S2: weight mode, GS=gross mode, NT=net mode
S3: weight of positive and negative, “+” or ” –“
S4: “kg” or “lb”
Data: weight value, including decimal point
CR: carriage return
LF: line feed

Format 2：（compatible for Toledo big display ）

Output continuous format																	
STX	SWA	SWB	SWC	X	X	X	X	X	X	X	X	X	X	X	X	CR	CKS
1	2			3						4						5	6

STX is ASCII 02H

State A			
Bits0,1,2			
0	1	2	Decimal point
1	0	0	XXXXXX0
0	1	0	XXXXXXX
1	1	0	XXXXX．X
0	0	1	XXXX．XX
1	0	1	XXX．XXX
0	1	1	XX．XXXX
Bits3,4			Division
0	1		X1
1	0		X2

State B	
BitsS	function
Bits0	gross=0，net=1
Bits1	symbol：positive =0，negative=1
Bits2	Overload （or under zero）=1
Bits3	dynamic=1
Bits4	unit：lb=0, kg=1
Bits5	Constant 1
Bits6	Constant 0

State C			
Bit2	Bit1	Bit0	unit
0	0	0	Kg or lb
0	0	1	g
0	1	0	t
Bit 3			Printing =1
Bit 4			Extened display =1
Bit 5			Constant 1
Bit 6			Constant 0

Weight display 6 digits, taken ASCII to show

CR is ASCII 0DH

CKSis the sum of the previous bit below seven bit.

Format 3：（compatible for Yaohua A9）

ASCII code to show the data. The transmission data is the current weight.

Each one is by 12 groups of data.

X bit	Note
1	02(XON) start
2	+ or - symbol
3	High bit of weighing data
:	Weighing data:
:	Weighing data:
8	Low bit of weighing data
9	Decimal bits from right to left(0~4)
10	Odd or even checking for high 4 bits
11	Odd or even checking for low 4 bits
12	03(XOFF) end

Odd or even : 2⊕3⊕……8⊕9

Format 4:

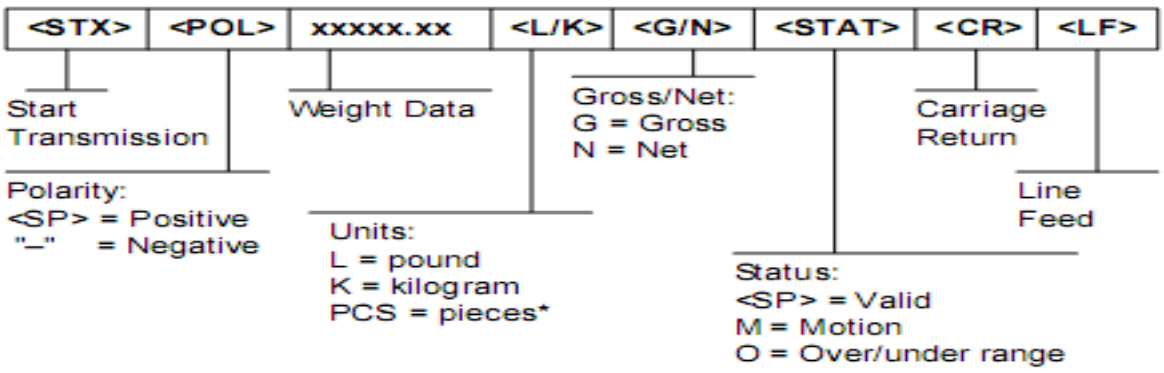

Format 5：

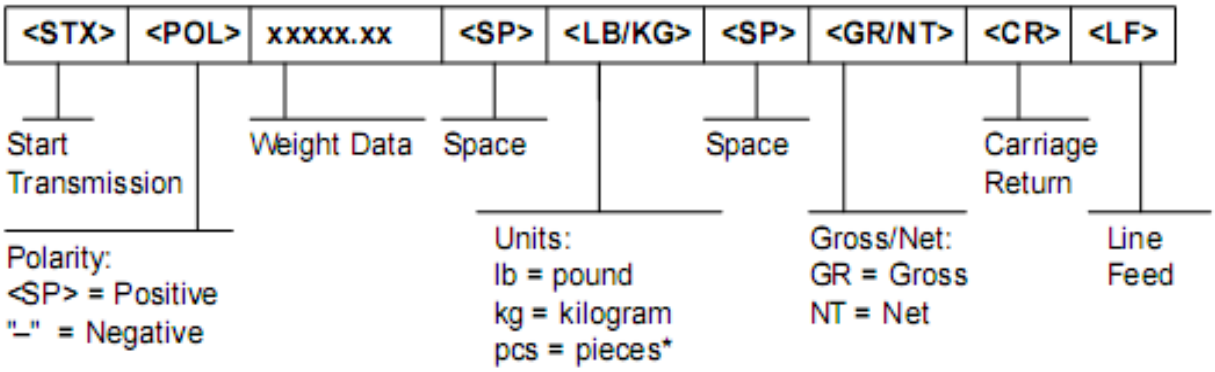

5.2 Commanding format

5.2.1 Standard command

Use ASCII code to response

transmit：

format	STX	ADDRESS	COMMAND	VERIFY	ETX
content	02	A~Z / 20	A~F,T,Z	3H 3L	03

No address, use space(20hex), 6 bits in total.

responsing：

Format	STX	ADDRESS	COMMAND	REPLY	VERIFY	ETX
Content	02	A~Z / 20	B~D	(W)	3H 3L	03
Content	02	A~Z / 20	A,T,Z,N,X		3H 3L	03

W: symbol+weight+decimal position

Back 6/14 bit

Command list：

A: shaking hand

B: gross weight

C: tare weight

D: net weight

T: tare

Z： zero

N：command can’t be done

X：Non commanding

5.2.2 Simple commanding：

Code	Name	Function
T	Tare	Reduce tare or clear tare
Z	Zero	Tare to be zero
P	Printing	Print the current weight
R	Read gross/net weight	Response to format 1

Note:
If set salve ID is not 0, transmit with ID.

5.3 Printing mode

5.3.1 Standard printing mode

S/N: XXX
Date: YY.MM.DD
Time: HH:MM:SS
Net XXXX.XXkg
Tare XXXX.XXkg
Gross XXXX.XXkg

5.3.2 Accumulation operation printing

Date: YY.MM.DD
Time: HH:MM:SS
nXXX XXXX.XXkg

5.3.3 Accumulation result printing

Total XXXX.XXkg
count XXX

5.3.4 Counting printing

Date: YY.MM.DD
Time: HH:MM:SS
pieces XXXXXXpcs
APW XXXX.XXkg
Net XXXX.XXkg
Tare XXXX.XXkg
Gross XXXX.XXkg

5.3.5 Checking printing

Date: YY.MM.DD
Time: HH:MM:SS
Number XXX
Weight XXXX.XXkg

6、Maintenance

6.1 Regular error and solution

ERROR	REASON	SOLUTION
UUUUUU	1.Overload 2. Wrong connection with load cell 3. Load cell has quality problem.	1. Reduce the weight 2. Check load cell connection 3. Inspection load cell. Check the input and output
nnnnnn	1.The adjust for scale not good 2. Wrong connection 3. Load cell has quality problem	1. Check the scale position 2. Check load cell connection. 3. Check input and output resistance to judge it is good or not.
ERR1	During calibration, not input the weights or the weight is overload	Input the correct weights
ERR2	During calibration , the weights is below than Min. required weights	The calibration weights Minimum is 10% of Max. cap. Recommend 60%-80% of Max. Cap.
ERR3	During calibration, the input signal is negative	1. Check the connection is correct 2. Check load cell is no problem 3. Re-calibration if still wrong change the PCB
ERR4	During calibration, the signal is unstable	After the platform is stable, start calibration
ERR5	EEPROM error	Change PCB
ERR6	Exceed zero range	Remove the load
ERR9	The number to check is too big	Input again with proper number
ERR10	No information	The accumulation is empty

6.2 Daily maintain

1. Protect the indicator from strong sunlight to prolong the using life

2. Good connection between load cell and indicator. Far from away from strong electric field, magnetic field.

3. Power off the indicator when lightning
4. Power off the indicator firstly before plug and unplug

6.3 battery for use

First use, please charge the battery fully. If the voltage is too low, the indicator can't work.

In the screen, there is a symbol to show the battery condition.

If low voltage, LCD battery symbol will blink and LOBAT light(RED LED) will be on. Please charge the battery on time.

Usually 12 hours, it can be charged fully.

After the charge, LCD battery symbol will be full and the LED green on. And it can work with AC power directly.

If long time not to use indicator, please take out the battery to avoid the leak of battery damaging the indicator.

6.4 Restore default parameter

Enter to calibration, Set C07=1. Press print then press power to exit saving setting. All parameter will back to default

Note：Pls. do not restore default parameter easily if you are not professional staff or not yet calibrate the scales.

Parameter	Instruction	Default	Optional
C01	Calibration	1	1，2
C02	Decimal digits	0	0，1，2，3，4
C03	Division	1	1，2，5，10，20，50
C04	Max. capacity	10000	1~999999
C05	Empty calibration	0	0，1
C06	Capacity calibration	0	0，1
C07	Restore default	0	0，1
C08	Holding	0	0，1，2，3，4
C09	unit change switch	1	0，1
C10	Power saving mode	0	0，1，2
C11	Auto power off	0	0，1，2，3，4，5，6
C12	Alarm switch	1	0，1

C13	Upper limit alarm	000000	0~MAXLOAD
C14	Lower limit alarm	000000	0~MAXLOAD
C15	Inner code		200214~585945
C16	Preserved menu		
C17	Preserved menu		
C18	Serial interface	1	0，1，2，3
C19	Preserved menu		
C20	Manual zero	2	0，1，2，4（10，20，100）
C21	Initial zero	10	0，2，5，10，20
C22	Zero tracking range	0．5	0.0，0.5，1.0，2.0~5.0
C23	Zero tracking time	1	0，1，2，3
C24	Overload range	9	0~99
C25	Negative range	10	0，10，20（50，100）
C26	Standstill time	1	0，1，2
C27	Standstill range	2	1，2，5，10
C28	Dynamic filter	0	0，1，2，3，4，5，6
C29	Noisy filter	2	0，1，2，3
C30	Preserved menu		
C31	Preserved menu		
C32	Preserved menu		
C33	Preserved menu		
C34	Preserved menu		
C35	Preserved menu		
C36	Preserved menu		
C37	Preserved menu		
C38	Preserved menu		
C39	Preserved menu		

6.5 Packing list

Packing list

S/N	Item	Name	Unit	QTY	Packing
1	Weighing indicator		PCS	1	
2	Plastic bag		PCS	1	
3	Accessories bag		PCS	1	
4	Power plug	US	PCS	1	
		UK	PCS	1	
		EU	PCS	1	
		AU	PCS	1	
		Other	PCS	1	
5	User manual		PCS	1	
6	Basement	Wall-mounted	PCS	1	
7	Certificate		PCS	1	
8	Packing list		PCS	1	