CCI

APPLICATION:
Weighbridges and silos
CAPACITY RANGE:
16t - 20t - 30t - 40t - 50t - 60t - 80t - 100t - 200t
MATERIAL:
Stainless Steel
ENVIRONMENTAL PROTECTION:
IP68
APPROVALS:
CE 3000 & 4500 Div - E.04.02.C04
OIML - R60/2000-ES1-13.03

CHARACTERISTICS

Construction using stainless steel.
The laser soldered closing protects from the typical environment in food and chemical industry.
Mounting compatibility.

APPLICATIONS

The CCI model is manufactured to maintain its performance capabilities in the environmental conditions existing in food industries, where tasks and cleaning demand stainless steel and a good environmental protection.

OPTIONS

Length of the cable is optional.
Hostile environmental cable.
ATEX option
EC-Type examination certificate CEC 11 ATEX 040 X according directive 94/9/EC
Ex II 1G EExia IIC T6 (Ta2-0÷+40ºC)
TX (Ta-20÷+65ºC)
Ex II 1D tD A20 TXºC(Ta-20÷+40ºC)
TXºC (Ta-20÷+65ºC)
For more information look up the EC-type examination certificate, and documentation.
Consult for special requirements.

INOX Stainless Steel | IP68 | M | OIML | Ex | C3 | C4,5

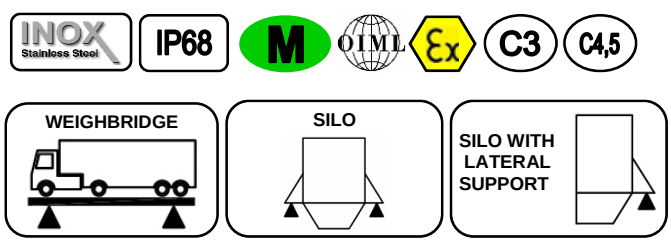

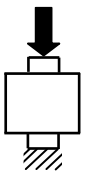

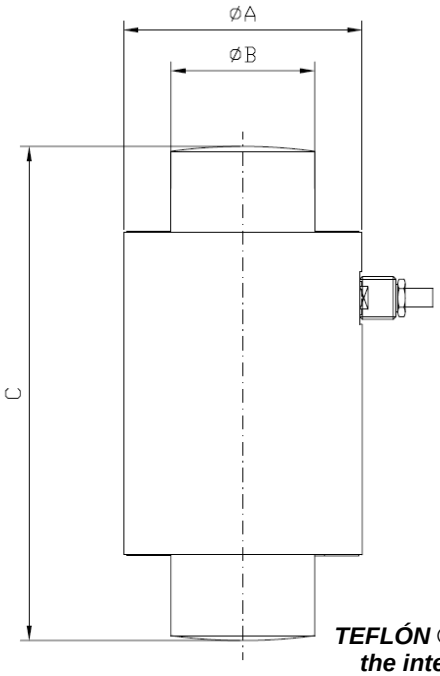



TEFLÓN ® protects all the internal cables

Capacity	A	B	C
16 – 50t	73	44	150
60t	88,9	44	210
80t – 100t	88,9	64	210
200t	114,3	64	210

Dimensions in mm

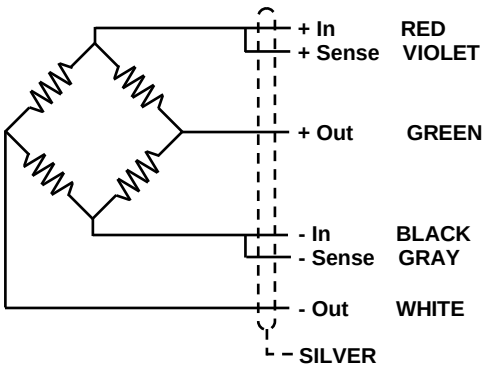

www.ascellsensor.com
info@ascellsensor.com
Tel: (+34) 93 776 60 89
Fax: (+34) 93 775 14 72

These specifications are subjected to changes, due to continuous improvement of the design.

CCI

ASCELL

GENERAL TECHNICAL CHARACTERISTICS FOR g= 9,8031 m/ s²

OIML Class	C3 - C4,5	UNITS
Divisions n_{LC}	3000 - 4500	
Minimum Dead load E_{min}	0	kg
Z= E_{max} / 2DR	3000 - 4500	
Y= E_{max} / V_{min}	10000	
Rated Capacity E_{max}	16000 - 20000 - 30000 - 40000 50000 - 60000 - 80000 - 100000 200000	kg
Rated Sensitivity C	2 ± 0,1 %	mV/V
Rated Input Voltage	10	V dc
Input Voltage Range	5...15	V ac/dc
Input Resistance R_{LC}	700 ± 10	Ω
Output Resistance	700 ± 10	Ω
Zero Balance	± 2	% E_{max}
Insulation Resistance at 50 V DC	> 5000	MΩ
Service Overload	> 150	% E_{max}
Overload Limit	> 300	% E_{max}
Temperature Range : Compensated : Operating : Storage	- 10 ... 40 - 30 ... 85 - 30 ... 90	ºC ºC ºC
Max. Nonlinearity	0,015	% E_{max}
Max. Hysteresis	0,015	% E_{max}
Max. No repeatability	0,01	% E_{max}
M Max. Creep in 4 hours	0,02	% E_{max}
Max. Zero Recovery Test in ½ hour	0,007	% E_{max}
Max Temperature effect : On Sensitivity	0,00097	% E_{max} / ºC
: On Zero	0,00116	% E_{max} / ºC
Weight	From 16t to 50t ~ 2221	g
Cable Length	15	m
Environmental Protection	IP68 - DIN 40050 (100h 1m)	



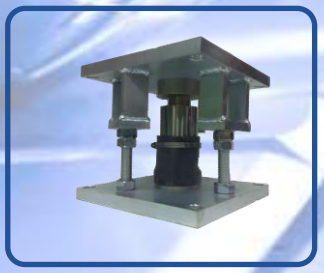

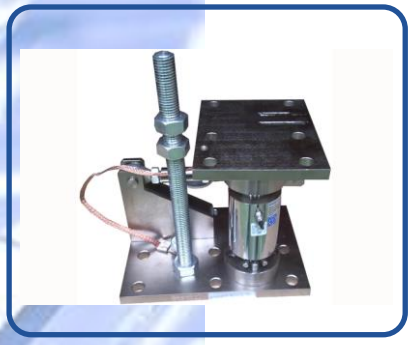

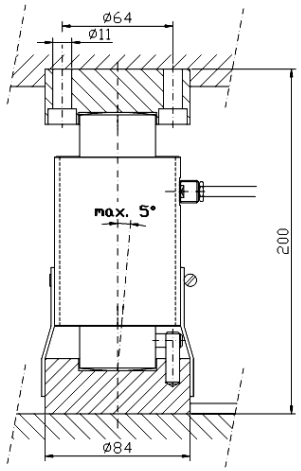

Ref. 491030
16-50t

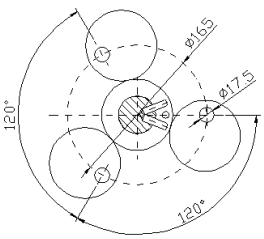

ISO 9001

Made in EUROPE

www.ascellsensor.com
info@ascellsensor.com

Tel: (+34) 93 776 60 89
Fax: (+34) 93 775 14 72

These specifications are subjected to changes, due to continuous improvement of the design.